#06424

ERICKSON

TIE-IT. TOW-IT. LOAD-IT.

3000 LB. WINCH

12V DC

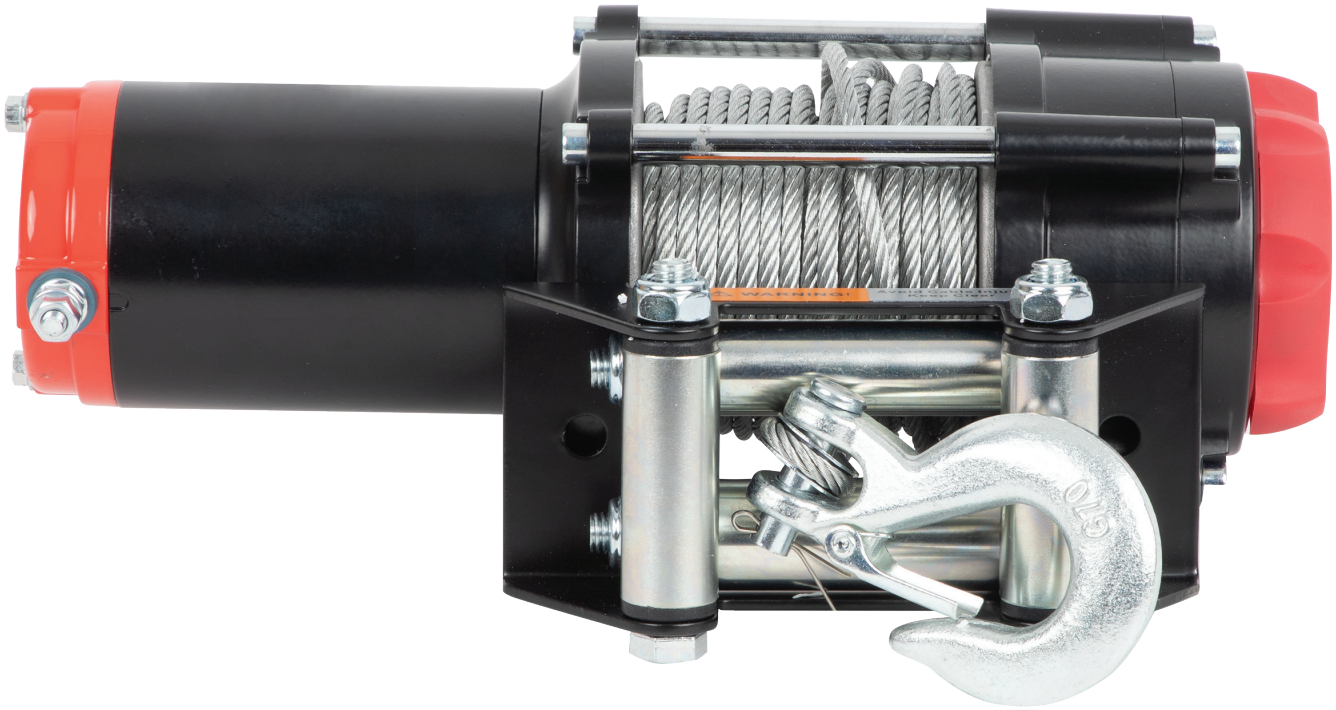

WARNING

To avoid personal injury and/or property damage, please read and follow ALL instructions before assembling and operating.
KEEP THIS MANUAL FOR REFERENCE

Contact Information
Marine City, Michigan 48039
Thamesville, Ontario N0P 2K0
Toll Free: 1-888-546-4668

Safety

READ THOROUGHLY BEFORE OPERATION YOUR WINCH. FAILURE TO FOLLOW INSTRUCTIONS COULD RESULT IN SERIOUS HARM OR DEATH

1. **DO NOT exceed the rated capacity**
2. **DO NOT use for lifting or moving people or animals**
3. **Maintain a safe distance to the side of the cable when under tension**
4. **NEVER step OVER or NEAR a cable under load**
5. **The wire may break before the motor stalls. When loads are near or at rated capacity, use a pulley block/snatch block to reduce the load on the wire rope.**
6. **DO NOT operate vehicle to pull a load on the winch cable (towing). This could result in cable breakage.**
7. **Use specified anchor points on vehicle per manufacturer.**
8. **Winch is not intended to secure or hold a vehicle for extended period of time.**
9. **Do not use winch to secure load for transportation**
10. **After use disconnect remote control and battery leads**
11. **Do not accelerate your vehicle while winching. Loss of traction can cause a shock load on the cable.**
12. **Keep sparks, and flames away from batteries at all time. Do not lean over battering during operation. Wear protective eyeware.**
13. **Do not hoist loads or use for overhead lifting.**
14. **If motor stalls, do not maintain power to the winch.**
    ELECTRIC WINCHES ARE DESIGNED FOR INTERMITTENT USE.
15. **Operate winch for short bursts. If the motor becomes uncomfortably hot to the touch, stop winching immediately. *DO NOT EXCEED PULL FOR MORE THAN 1 MIN. AT OR NEAR RATED LOAD.***
16. **Never release the free-spool clutch when there is a load on the winch.**
17. **Use hook strap when handling the hook for spooling or unspooling the wire rope.**
18. **Use gloves when handling the cable. Never let the cable slide through your hands.**
19. **DO NOT wrap the cable around any object and hook back onto itself.**
20. **Use blocks under wheels of vehicle when on incline.**

IF YOU HAVE QUESTIONS ABOUT YOUR WINCH, OR ABOUT WINCH SAFE USE CONTACT
1-888-546-4668

Specifications

Layer Couches de Câbles	Rated Line Pull lbs (kg) Cap. nominale	Total Rope on Drum ft (m) Câble sur tambou
1	3000 lb. (1360 kg)	7.55 ft (2.3m)
2	2561 lb. (1162 kg)	19.03 ft (5.8m)
3	2234 lb. (1013 kg)	31.50 ft (9.6m)
4	1981 lb. (899 kg)	43.96 ft (13.4m)
5	1779 lb. (807 kg)	49.85 ft (15.2m)

Line Pull lbs. (kg) Charge	Line Speed FPM (m/min) Vitesse pi et m/min	Motor Amps Intensité moteur
0	22 ft (6.7 m)	12 A
750 lbs (341 kg)	11 ft (3.3 m)	45 A
1500 lbs (680 kg)	9 ft (2.74 m)	91 A
2250 lbs (1020 kg)	6 ft (1.82 m)	138 A
3000 lbs (1360 kg)	3.35 ft (1.02 m)	235 A

Components

WARNING: DO NOT OPERATE IF ANY COMPONENTS ARE MISSING OR DAMAGED. FAILURE TO COMPLY COULD RESULT IN MULFUNCTION OR PERSONAL INJURY.

1. Winch / Treuil
2. Fairlead / Guide-câble
3. Solenoid / Relais
4. Wiring / Câble
5. Rocker switch / Interrupteur à bascule
6. Assist strap / Sangle d'appoint
7. Hook / Crochet
8. Handle bar mount / Interrupteur

Assembly

This class of winch is designed with a standard bolt pattern to fit many mounting kits available.

Ensure motor, drum, and gear housing are properly aligned on mounting plate for even distribution of the rated load. Ensure the large roller is on the bottom of the fairlead.

Assembling the Winch

1. Insert bolts through mounting plate hole and attach the roller fairlead to the mounting plate with flat washer, lock washer, and nut.

2. Attach the winch to the mounting plate and flat surface. Secure the winch to the mounting plate with nut, flat washer, and lock washer.

3. Rotate the clutch knob to the 'OUT' position to disengage clutch. Spool out a short lead of wire rope. Feed wire rope through roller fairlead.

4. Attach the clevis hook to the cable. Attach assist strap to clevis hook.

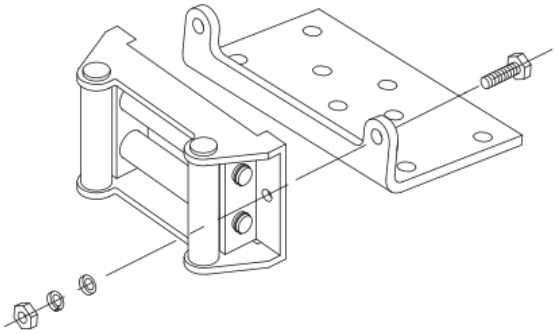

Mounting the Remote

1. The remote is typically installed on the left handlebar.

2. Use a piece of eletrical atpe around the handlebar to prevent the remote from rotating. Do not tighten over any hoses or cables.

3. Route the wires back to the battery and winch.

4. Ensure there is full range of motion with the handlebars, then secure the remote controllers cables.

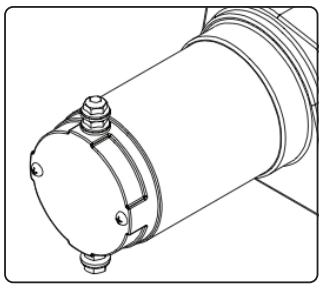

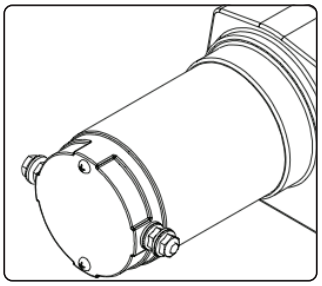

Motor leads may be rotated to avoid interferance with other components

Installing the Rocker Switch

DO NOT route cables across sharp edges, through or near moving parts, or parts that become hot.

1. Decide which handlebar the rocker switch will be mounted on. (The rocker switch is usually installed on the left handlebar).
2. Use a piece of electrical tape (not provided) around the handlebar to help prevent rotation of the mount.
3. Tighten the rocker switch in place. DO NOT over tighten or tighten/clamp over any hoses or cables.
4. Once the rocker switch is mounted, the wires can be routed back to where thte solenoid/ contactor is located.
5. Make sure the handlebars have full range of motion and then secure the rocker switch's cable with the supplied cable ties.

Wiring the Winch

DO NOT route cables across sharp edges, through or near moving parts, or parts that become hot.

1. Connect the yellow and blue cables to the motor terminals on the winch. (Yellow to the positive (+) terminal of the motor. Blue to the negative(-) terminal of the motor). Tighten the terminal nuts on the motor. DO NOT over tighten. Route the other ends to the solenoid/ contactor location.
2. Connect the yellow and blue cables to the solenoid/ contactor (yellow to yellow and blue to blue). DO NOT tighten nuts.
3. Connect the red and black cables to the solenoid/ contactor (red to red and black to black). DO NOT tighten nuts. Route the other ends to the vehicle's battery.
4. Connect the red lead to the positive (+) terminal of the vehicle's 12 volt battery.
5. Connect the rocker switch to the solenoid/ contactor (black to black and green to green).
6. Splice the end of the red wire on the rocker switch, to an ignition (keyed) controlled power source using the supplied wire tap.

wiring continued

7. Once all wiring is connected to the solenoid/ contactor it can then be mounted using the supplied M6 hardware.
8. Tighten the solenoid/contactor terminal nuts. DO NOT over tighten.
9. Connect the black lead to the negative (–) terminal of the vehicle's 12 volt battery.
10. Place all terminal boots over terminals and secure all cables with cable ties or electrical tape (not provided).
11. Check for proper drum rotation. Pull and turn the clutch knob to the "OUT" position (free spooling). Pull out some cable from the drum, and then turn the clutch knob to the "IN" position to engage the gears. Press the cable out button on the rocker switch. If the drum is turning and releasing more cable, then your connections are accurate. If the drum is turning and collecting more cable then reverse the leads on the motor. Repeat and check rotation.

Wiring the Winch

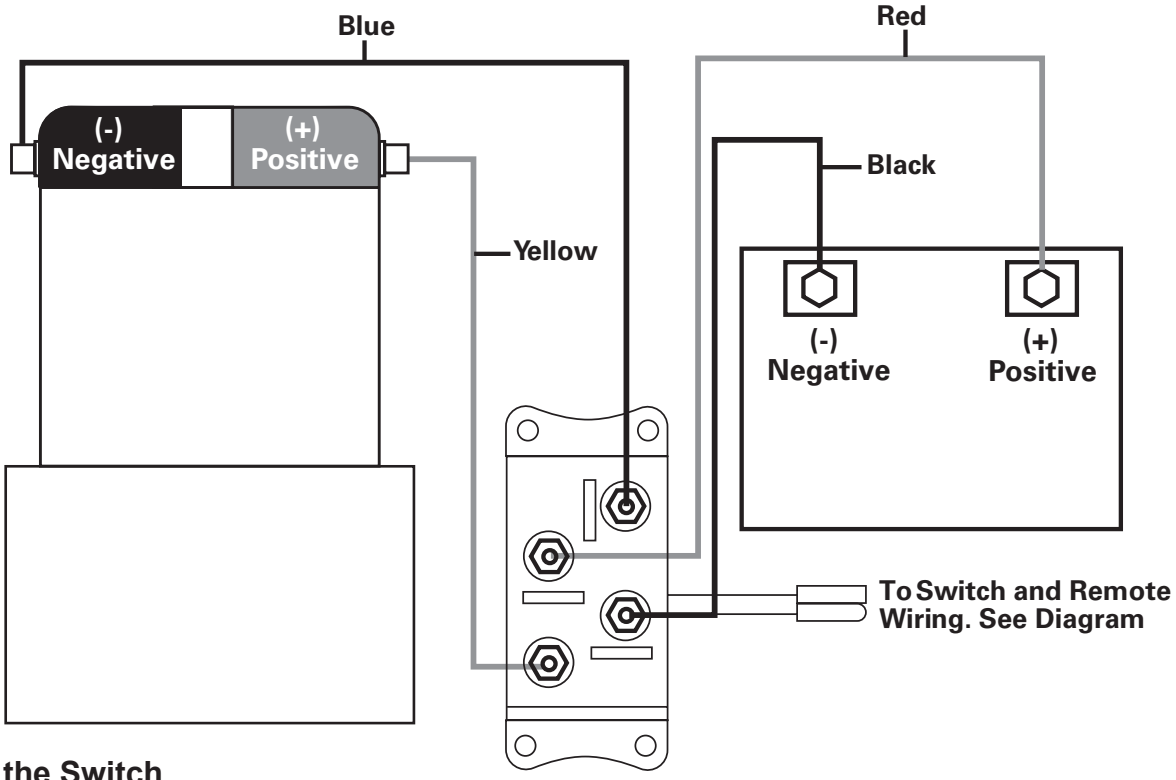

Wiring the Switch

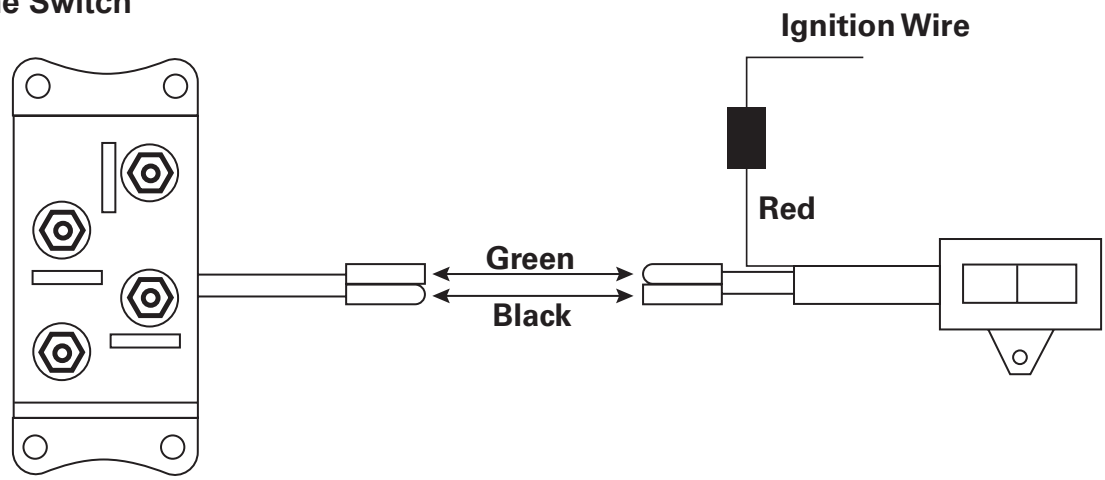

Operation

General Tips for Safe Operation

Overloads can damage the winch, motor and/or wire rope. For loads over 50% the rated load we recommend the use of a pulley block/snatch block to double the wire rope line. This will aid in two ways:

(a) reduce the number or rope layers on the drum

(b) reduce the load on the wire rope by as much as 50%.

When doubling the line back to the vehicle, attach to the tow hook, frame or other load bearing part. The vehicle engine should be kept running during operation of the winch to minimize battery drain and maximize power and speed of the winch. If the winch is used for a considerable time with the engine off the battery may be drained and too weak to restart the engine.

We recommend that you set up a few test runs to familiarize yourself with rigging techniques, the sounds your winch makes under various loads, the way the cable spools on the drum, etc. Inspect the wire rope and equipment before each use. A frayed or damaged rope MUST be replaced immediately. Inspect the winch installation and bolts to ensure that all bolts are tight before each operation. Store the remote control in a place that it will not be damaged.
Any winch that appears to be damaged in any way, or operates abnormally MUST BE REMOVED FROM SERVICE UNTIL REPAIRED.

Self Recovery

Locate a suitable anchor such as a strong tree trunk or boulder.
Always use a sling as an anchor point. *(fig. 1)*

The roller fairlead helps guide the wire rope to reduce binding on short side pulls. DO NOT PULL FROM acute angle. Wire rope that collects at one side of the drum will cause damage. *(fig. 2)*

A short pull from an angle can be used to straighten a vehicle. Long pulls the rope should be at 90° to the winch.

Place a blanket/jacket over the wire rope ~6' from the hook to dampen any snapback from a broken cable. For additional protection open the hood of the vehicle. *(fig. 3)*

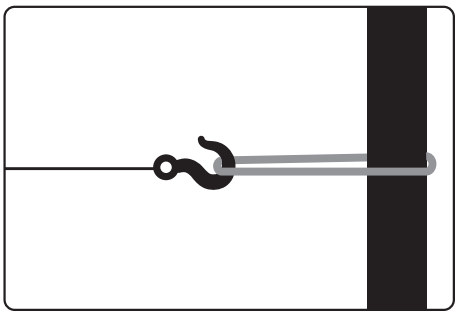

fig.1 Sling as anchor point

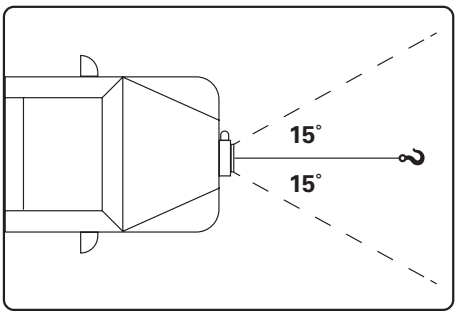

fig.2 Safe pulling angle

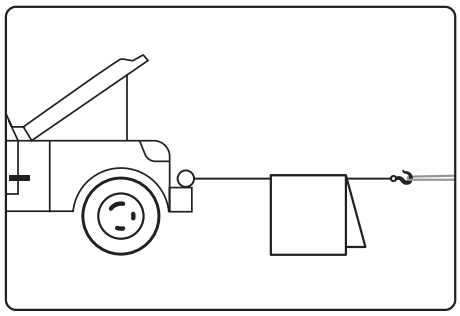

fig.3 Dampen possible snapback from broken cable

Warranty

Warranty Qualifications
Effective from the day you purchase the product. Please keep your dated purchase invoice as proof.

Repair/Replacement Warranty
Erickson Manufacturing Ltd. warrants to the original purchaser that the mechanical components will be free of defect in material and workmanship for 90 days from the original date of purchase. Transportation charges on product submitted for repair or replacement under warranty are the sole responsibility of the purchaser. This warranty only applies to the original purchaser and is not transferable.

Do Not Return The Unit to the Place of Purchase
Contact Erickson Manufacturing Ltd's Technical Service and service people will troubleshoot any issue via phone or email. Repairs or replacements without prior authorization, or at an unauthorized repair facility, will not be covered by this warranty.

Warranty Exclusions
This warranty does not cover the following repairs and equipment:

Normal Wear
This warranty does not cover the repair when use has exhausted the life of a part or the equipment as a whole.

Installation, Use and Maintenance
This warranty will not apply to parts and/or labor if this product is deemed to have been misused, neglected, involved in an accident, abused, loaded beyond specifications, modified, or installed improperly. Normal maintenance is not covered by this warranty.

Other Exclusions
This warranty excludes:
- Cosmetic defect such as paint, decal etc.
- Wear items
- Accessory parts
- Failures due to acts of God and other force majeure events beyond the manufacturer's control.
- Problems cause by parts that are not Erickson Manufacturing Ltd. parts.

Limits of implied Warranty and Consequential Damage
Erickson Manufacturing Ltd. disclaims any obligation to cover any loss time, use of this product, freight, or any incidental or consequential claim by anyone from using this product. **THIS WARRANTY IS IN LIEU OF ALL OTHER WARRANTIES EXPRESS OR IMPLIED, INCLUDING WARRANTIES OF MERCHANTABILITY OR FITNESS FOR A PARTICULAR PURPOSE**. A unit provided as exchange will be subject to the warranty of the original unit. The length of the warranty governing the exchanged unit will remain calculated by reference to the purchase date of the original unit. This warranty gives you certain legal rights which may change from state to state. Your state and/or province may also have other right you may be entitled to that are not listed within this warranty.

Contact Information
Marine City, Michigan 48039
Thamesville, Ontario N0P 2K0
Toll Free: 1-888-546-4668